Showcase & Cold room controller

FX32J series

DOTECH
SENSING & CONTROL

DOTECH INC.
6F, Joongang-Ilbo Bldg, 778 Wonsi-Dong, Danwon-Gu,
Ansan-Si, Gyeonggi-Do 425-852 Korea
Tel : +82-31-495-3767, Fax : +82-31-495-3917
www.dotech21.com
INNOBIZ

※ Cautions

1. This product may cause an electric shock in handling. Please do not attempt to open it with power turned on.
2. This product should be installed in a place fixed secured by a rack or panel.
3. This product can be used under the following environmental condition.
   ① Indoor ②Pollution Degree 2 ③At an altitude of 2000m or below
4. Power input must be within the designated ranges.
5. To turn on or turn off power supply for this product, please the circuit breaker or switch of a standard product of IEC 60947-1 or IEC 60947-3 product and install it within a close distance allowing convenient operation by user.
6. Please be understood that if this product is dismantled or modified discretionary, after sales service will not be able to be provided.
7. An output wire to be used for this product should be inflammable grade FV1 (V-1 grade or above), the thickness of the wire should be AWG No. 20 or above(0.50mm²).
8. In order to prevent it from an inductive noise, please maintain the high-voltage wire and power wire separated.
9. Please avoid installing the product in a place where a strong magnetism, noise, severe vibration and impact exist.
10. When extending the sensor wire, use a shield wire and do not extend it unnecessary long.
11. The sensor wire and signal wire should be away from the power and load wires using conduits separately installed.
12. Please avoid using the product near a device generating strong high frequency noise (high-frequency welding machine, high-frequency sewing machine, high-frequency radiotelegraph, high capacity SCR controller)
13. Product's damages other than those described in the guarantee conditions provided by the manufacturer shall not be responsible by us.
14. If this unit is used to control machineries (Medical equipment, vehicle, train, airplane, combustion apparatus, entertainment, processing and transportation equipment, elevator and various safety device etc.) enabling to effect on human or property, it is required to install fail-safe device.

※ The Aforementioned precautions must be observed, and if you fail to do so, it may cause a product's breakdown.
※ The specifications, dimensions, and etc. are subject to change for enhancement without a prior notice.

1. Overview

※ Features

FX32J series which are embedded with the newest electronic micro-processor is designed and developed for control and maintenance of showcase and cold room. It has various kinds of parameters and functions for effective control of refrigeration equipments, and also there are various options to select in accordance with functions or relay capacity.

: Basic specifications

Items	Description	
Dimension	87(W)mm X 30(H)mm X 114(D)mm	
Power	-F	100 – 240 Vac, 50 / 60 Hz
	-T	12 Vac/Vdc, 50 / 60 Hz
	-W	12 - 24 Vac/Vdc, 50 / 60 Hz
Power consumption	MAX 6 VA	
Connection	Screw terminal, Wire range : 24~12 AWG	
Input	3P temperature sensor input / 1P digital input	
Output	J1= 1 relay, J2= 2 relays, J3= 3 relays	
	05A	250 Vac / 30 Vdc / 5 A
	10A	250 Vac / 30 Vdc / 10 A
	16A	250 Vac / 12 Vdc / 16 A
Operation	Temp. – 10 ~ 50 ℃, Humidity 90 %RH or less	
Storage	Temp. – 20 ~ 60 ℃, Humidity 90 %RH or less	

※ Specifications of output are subject to change without prior notice.

: Ordering guide

Model name	Description
FX32J1-05P00-F(T)	1 relay Comp(5A)
FX32J1-16P00-F(T)	1 relay Comp(16A)
FX32J2-05P00-F(T)	2 relay Comp(5A), def(5A)
FX32J2-16P00-F(T)	2 relay Comp(16A), def(10A)
FX32J3-05P00-F(T)	3 relay Comp(5A), def(5A), aux(5A)
FX32J3-12P00-F(T)	3 relay Comp(12A), def(8A), aux(5A)

※ RS485 communication model is an optional requirement.
※ Temperature sensor should be purchased separately.

: Components

Controller

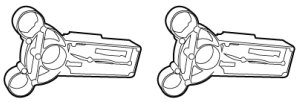

Bracket 2 ea for mounting

User's manual

: Accessories

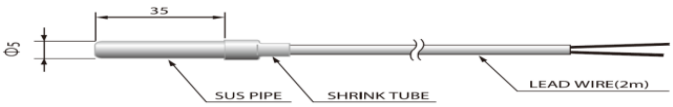

DPR-TH01-ET*2M : NTC 5KΩ at 25°C / -50~105°C / ±0.3°C at 25°C

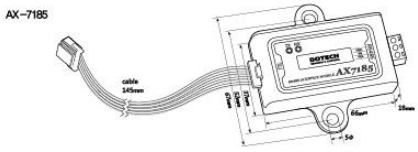

AX7185 : RS485 Communication module

2. Installation

: Dimension & Panel Cut (mm)

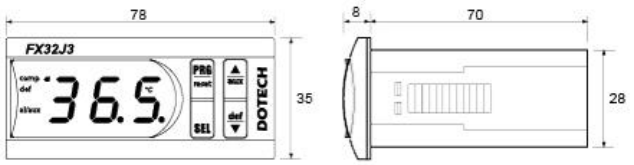

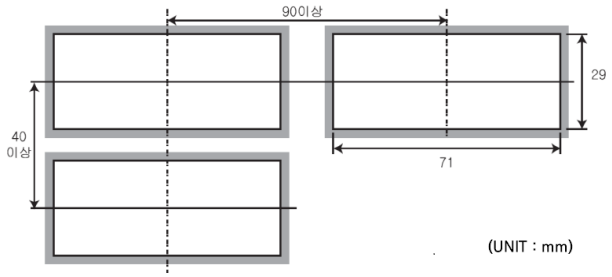

: Wiring Diagram

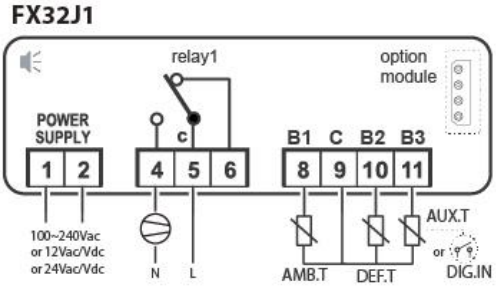

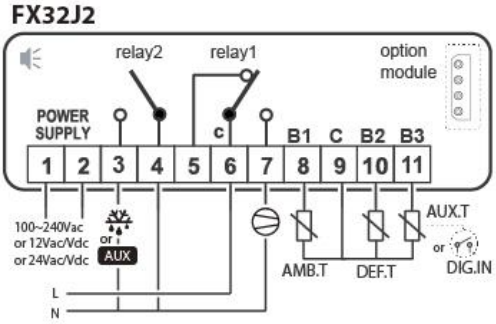

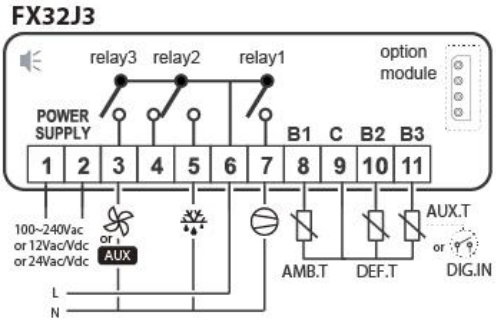

: FX32J1 Terminal function

No.	Port	Description
1	POWER SUPPLY	100 – 240 Vac, 50 / 60 Hz Power input 12 Vac / Vdc, 50 / 60 Hz Power input 24 Vac / Vdc, 50 / 60 Hz Power input
2		
4	Relay1	When signal of Comp is activated (Close)
5		Common signal
6		When signal of Comp is activated (Open)
8	B1	AMB temp. sensor input
9	C	Common input
10	B2	DEF temp. sensor input
11	B3	AUX temp. sensor and digital signal input

: FX32J2 Terminal function

No.	Port	Description
1	POWER SUPPLY	100 – 240 Vac, 50 / 60 Hz Power input 12 Vac / Vdc, 50 / 60 Hz Power input 24 Vac / Vdc, 50 / 60 Hz Power input
2		
3	Relay2	When signal of AUX is activated (Close)
4		Common signal
5	Relay1	When signal of Comp is activated (Open)
6		Common signal
7		When signal of Comp is activated (Close)
8	B1	AMB temp. sensor input
9	C	Common input
10	B2	DEF temp. sensor input
11	B3	AUX temp. sensor and digital signal input

: FX32J3 Terminal function

No.	Port	Description
1	POWER SUPPLY	100 – 240 Vac, 50 / 60 Hz Power input 12 Vac / Vdc, 50 / 60 Hz Power input 24 Vac / Vdc, 50 / 60 Hz Power input
2		
3	Relay3	When signal of AUX is activated (Close)
4	Relay2	When signal of DEF is activated (Open)
5		When signal of DEF is activated (Close)
6	C	Common signal
7	Relay1	When signal of Comp is activated (Close)
8	B1	AMB temp. sensor input
9	C	Common input
10	B2	DEF temp. sensor input
11	B3	AUX temp. sensor and digital signal input

3. User Interface

: Lamp & Operation Button

		Description
LED	comp	On when compressor output is in progress
	def	On when Def. output is in progress
	al/aux	On when Al/Aux output is in progress
	℃	On at temperature display
Button	PRG reset	Program setup, reset and check on set temperature
	▲ aux	Upward button (Increase) Manual ON/OFF for auxiliary output if pressing for 3 seconds
	def ▼	Downward button (Decrease) Manual ON/OFF for defrost output if pressing for 3 seconds
	SEL	Selection and storage
	▲ aux / def ▼	Check temperature value when pressing simultaneously
	PRG reset / SEL	Check set value when pressing simultaneously
	PRG reset / SEL	Compulsory cooling run / stop when pressing simultaneously for 10 seconds
	PRG reset / def ▼	Initialization when pressing simultaneously for 10 seconds

※ Check temperature of sensors: It will be displayed in the order of B1〉B2〉B3 temperature.

4. Parameter

: Parameter change

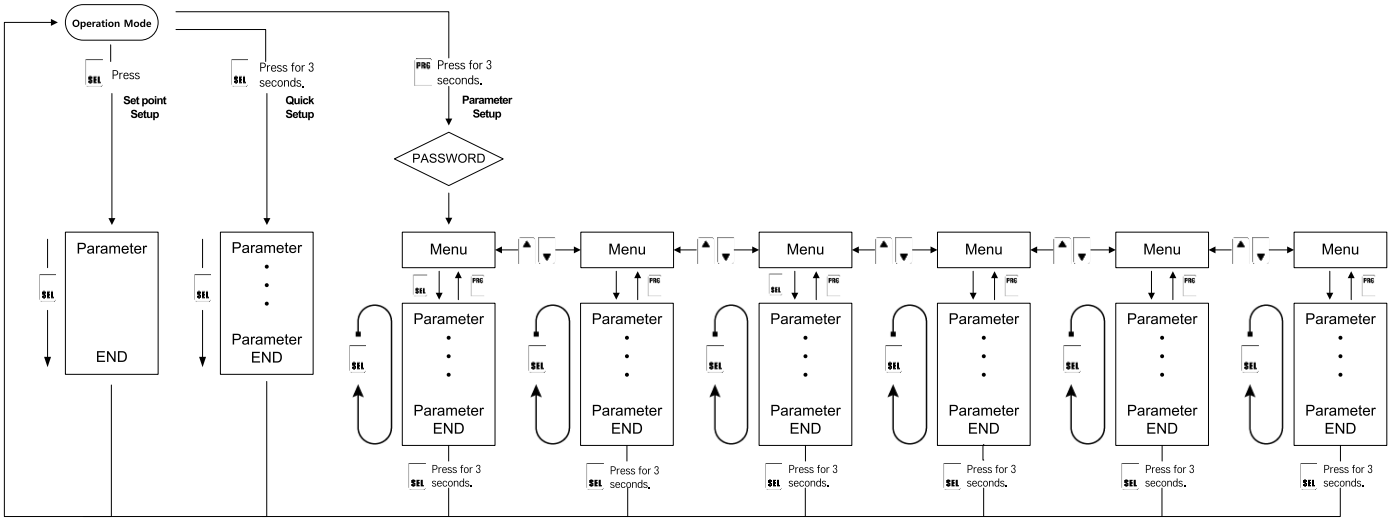

● Press SEL button is operation mode to change set point.

Press SEL button for 3 seconds to change quick setup

Press PRG button for 3 seconds to change parameters.

※ Password input is required to change parameters. (If password is not correct, it is impossible to change parameters.)

● Movement to next menu and storage of set value during parameter setup are performed by SEL button.

● Set value will be flickering in every 0.5 seconds and change set value using ▲ key or ▼ key.

● Present temperature value will be displayed if pressing SEL button for 3 seconds after finished setup.

● If there is no input for 3 minutes during setup, it will be returned to operation mode.

※ Some parameters are not subject to show in accordance with models.

: Set point Setup

Address	Description	Code	Unit	Step	Min.	Max.	Default	Set point by user
4 0056	Set point	rSP	℃	0.1	r03	r04	2.0	

: Quick Setup

Address	Description	Code	Unit	Step	Min.	Max.	Default	Set point by user
4 0056	Set point	rSP	℃	0.1	r03	r04	2.0	
4 0057	Control deviation	rdF	K	0.1	0.1	99.9	2.0	
4 0065	Defrost termination temp.	d04	℃	0.1	−50.0	158.0	15.0	
4 0067	Defrost cycle	d06	Hour (Min.)	1	−199 (※1)	192	4	
4 0068	Max. defrost time	d07	Min. (Sec.)	1	−199 (※1)	240	30	

If users set (※1) to minus (−), defrost cycle and maximum defrost time will be changed in minutes and seconds respectively.
※ If defrost group (d01) is set to 0, d04~d07 will not be shown.

: Status Parameter (0.nF)

Address	Description	Code	Unit	Step	Min.	Max.	Default	Set point by user
4 0001	Virtual set point	n00	℃	0.1	−50.0	158.0		
4 0002	Room temp. sensor(B1)	n01	℃	0.1	−50.0	158.0		
4 0003	Defrost temp. sensor(B2)	n02	℃	0.1	−50.0	158.0		
4 0004	Aux. temp. sensor(B3)	n03	℃	0.1	−50.0	158.0		
4 0005	Aux. temp. sensor(B4)	n04	℃	0.1	−50.0	158.0		
4 0006	Aux. temp. sensor(B5)	n05	℃	0.1	−50.0	158.0		
4 0009	Total comp. running hour	n08	Hour	1	0	9999		
4 0010	Total comp. running times	n09	Hour	1	0	9999		
4 0011	Total defrost running hour	n10	Hour	1	0	9999		
4 0012	Total defrost running times	n11	−	1	0	9999		

: Display Parameter Setup (i.dS)

Address	Description	Code	Unit	Step	Min.	Max.	Default	Set point by user
4 0017	Display temp. selection (※1)	r01	0= Virtual temp. 1 = Room temp.(B1) 2= Defrost temp.(B2)		3= Probe temp.(B3) 4= Set point(RSP)		0	
4 0018	Alarm display	r02	0= No display		1 = Display		1	
4 0019	Decimal point display setup	r03	0 (0.1)= Display one decimal point 1 (1)= No display decimal point				0 (0.1)	
4 0020	Defrost display	r04	0= 'dF' 1 = 'dF'+Defrost temp.		2= 'dF'+Virtual temp.		0	
4 0021	Password	r05	-	1	0	999	99	
4 0022	Locking	r06	0= Release		1 = Quick setup, Locking		0	
4 0023	Room temp. sensor(B1) offset	r07	℃	0.1	-19.9	+19.9	0.0	
4 0024	Defrost temp. sensor(B2) offset	r08	℃	0.1	-19.9	+19.9	0.0	
4 0025	Probe temp. sensor(B3) offset	r09	℃	0.1	-19.9	+19.9	0.0	
4 0026	Aux1 Output selection (※2)	r10	-	1	0	11	0	
4 0027	Aux2 Output selection (※2)	r11	-	1	0	11	3	
4 0028	Light ON/OFF selection (※3)	r12	-	1	0	3	0	
4 0029	Probe (B4) offset	r13	℃	0.1	-19.9	19.9	0.0	
4 0030	Probe (B5) offset	r14	℃	0.1	-19.9	19.9	0.0	

(※1) Setup of display temperature

Virtual temp. = (Probe temp * r07%) + (Room temp. * (100-r07) %)

e.g) If room temp. 25℃ Probe temp. 30℃ and , r07= 30%

Reflection rate of probe temperature 28℃ * 30% = 7.5℃,

Reflection rate of room temperature 30℃ * 70% = 21℃

Virtual temp. = 7.5℃ + 21℃ = 28.5℃

(※2) AUX output

Settings	Function	Description	Settings	Function	Description
0	Alarm status	On= Alarm	10	Comp 2 delay	On after 5 seconds from output of compressor 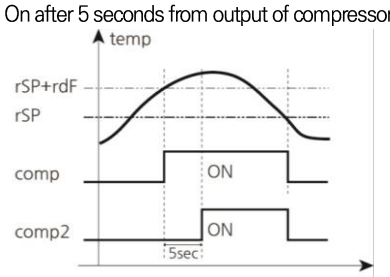 rSP=Set point, rdF=Control deviation
1	Defrost control	On= Defrost			
2	Heating control	On= Heating 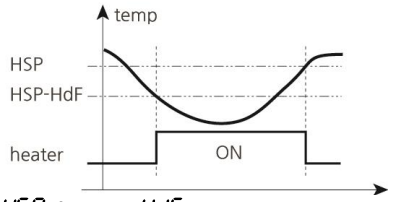 HSP=Set point, HdF=Heating control deviation			
3	Lighting control	On= Light On	11	Comp 2 step	Comp 2 step control 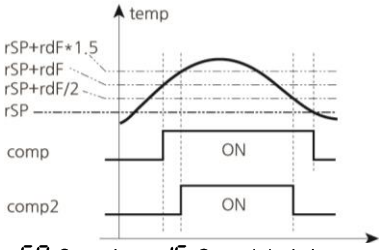 rSP=Set point, rdF=Control deviation
4	Drain control	On= Drain			
5	External buzzer	Turn alternately on/off in one second= Alarm			
6	Fan control	On= Fan On			
7	Alarm status	Off= Alarm			
8	DIG. IN1 Status	On= Close			
9	DIG. IN2 Status	On= Close			

(※3) Light ON/OFF

Settings	Function	Description
0	Button operation only	Turn light ON/OFF if pressing button for one second
1	Door switch interlock	Turn light on when door opened / Turn light off after 3 seconds when door closed
2	Curtain switch interlock	Turn light on when curtain opened / Turn light off after 3 seconds when curtain closed
3	Night time operation interlock	ON in the day time / OFF in the night time

: Alarm Parameter Setup (2.AL)

Address	Description	Code	Unit	Step	Min.	Max.	Default	Set point by user
4 0032	High Temp. Alarm(※1)	A01	K	0.1	0.0	50.0	5.0	
4 0033	Low Temp. Alarm (※2)	A02	K	0.1	0.0	50.0	3.0	
4 0034	High temp. alarm delay time after defrost	A03	Min.	1	0	240	20	
4 0035	High temp. alarm delay time	A04	Min.	1	0	240	50	
4 0036	Low temp. alarm delay time	A05	Min.	1	0	240	50	
4 0037	Temp. alarm delay time after power up	A06	Min.	1	0	240	120	
4 0041	Use of internal buzzer	AI 0	0= Nonuse		1 = Use		1	
4 0043	Digital input (DIG.IN1) function (※3)	AI 2	-	1	0	10	0	
4 0044	Digital input (DIG.IN2) function (※3)	AI 3	-	1	0	10	0	
4 0045	Digital input (DIG.IN3) function (※3)	AI 4	-	1	0	10	0	

(※1) **High temperature alarm**: (No alarm when setting it to no) e.g) Alarm occurs if it is 5.0℃ higher than set point

(※2) **Low temperature alarm**: (No alarm when setting it to no) e.g) Alarm occurs if it is 3.0℃ lower than set point

(※3) **Setup of digital input function**

Settings	Function	Detection condition
0	Nonuse	Use it as aux. temperature sensor input
1	Defrost start	Closing = Defrost in required
2	Interlock fault	Open = Alarm
3	Fan fault	Open = Alarm
4	Alarm input by users	Closed = Alarm
5	Night time power-saving operation	Open = Stop Close= Nighttime operation
6	Door open alarm	Open = alarm(Door open) (Door open alarm 'Edo' occurs after 'F07' door alarm delay time)
7	Remote run / stop	Open = Stop Close= Run
8	Compulsory cooling signal	Close = Compulsory cooling operation
9	Door switch (Comp. & Fan off)	Open = Door open (Door open alarm 'Edo' occurs after 'F07' door alarm delay time)
10	Door switch (Fan off)	Open = Door open (Door open alarm 'Edo' occurs after 'F07' door alarm delay time)

: Settings Parameter Setup (3.5t)

Address	Description	Code	Unit	Step	Min.	Max.	Default	Set point by user
4 0046	Unit of temp. display	r00	0= Celsius degree (℃)		1 = Fahrenheit (℉)		0 (℃)	
4 0047	Temp. control mode (※1)	r01	-	1	0	3	1	
4 0048	Number of sensor (※2)	r02	-	1	1	3	2	
4 0049	Min. set point range	r03	℃	1	-50	R04	-30.0	
4 0050	Max. set point range	r04	℃	1	R03	158	30.0	
4 0051	Injection time (※3)	r05	Min.	1	0	240	0	
4 0052	Daytime / right time mode	r06	0= Nonuse of nighttime operation 1 = Use of nighttime operation (DIG. IN AI 2=5, on: Nighttime operation mode) 2= Use of nighttime operation (Turn ON/OFF by contact of ID5)				0	
4 0053	Aux. sensor rate of virtual control temp.	r07	%	0.1	0	100	0	
4 0054	Delta value of night time operation (※4)	r08	K	0.1	-50.0	50.0	2.0	
4 0055	Control deviation for night time operation	r09	K	0.1	0.1	20.0	3.0	
4 0056	Set point	rSP	℃	0.1	R03	R04	2.0	
4 0057	Control deviation	rdF	K	0.1	0.1	99.9	2.0	
4 0058	Set point for heating operation	HSP	℃	0.1	-50.0	158.0	2.0	
4 0059	Control deviation for heating operation	HdF	K	0.1	0.1	99.9	2.0	
4 0060	Communication ID	Id	-	1	1	256	1	

(※1) Temperature control mode

Settings	Function	Operation condition	Settings	Function	Operation condition
0	Compulsory Cooling	Always ON regardless of temperature	2	Cooling control Modulating control	Run : Set value + (Deviation/2) Stop : Set value -(Deviation/2) 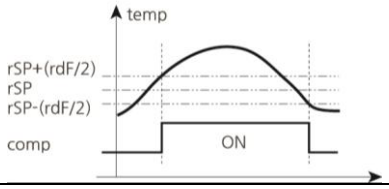
1	Cooling control Dead-band control	Run :Set value + deviation / Stop :Set value 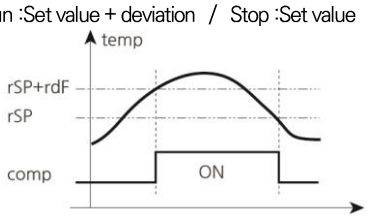	3	Heating control Dead-band control	Run : Set value - deviation / Stop : Set value 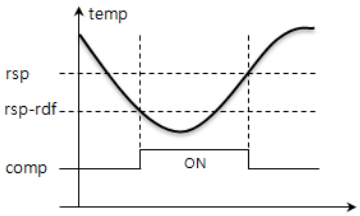

(※2) Setup for number of sensors

Settings	B1 (AMB.T)	B2 (DEF.T)	B3 (AUX.T)
3 EA	Use	Use	Use
2 EA	Use (Both ambient and defrost sensor when B2 sensor is faulty)	Use (Both defrost and ambient sensor when B1 sensor is faulty)	Nonuse
1 EA	Use (Both ambient and defrost sensor)	Nonuse	Nonuse

(※3) Injection time

- If cooling continues throughout this time, cooling stops as time as pump down and Lo alarm occurs.

(※4) Delta value of night time operation

- Delta value of temperature control which is applicable to nighttime operation (SP = rSP+ r08)

: Defrost Parameter Setup (4.dF)

Address	Description	Code	Unit	Step	Min.	Max.	Default	Set point by user
4 0061	Defrost termination (※1)	d00	–	1	1	4	2	
4 0062	Defrost group	d01	0= No defrost function 1 =Self (Defrost start by defrost cycle [d06] or defrost temperature 2=Defrost start by start signal input (AI 2=1)				1	
4 0063	Pump down time (※2)	d02	Min.	1	0	240	0	
4 0064	Drain time (※3)	d03	Min.	1	0	240	0	
4 0065	Defrost termination temp.	d04	℃	0.1	−50.0	158.0	15.0	
4 0066	Defrost schedule type	d05	0= Defrost start by defrost cycle [d06] 1 = Defrost start by time (with RTC function) 2= Defrost start by evaporating temperature				0	
4 0067	Defrost cycle	d06	Hour (Min.)	1	−199 (※4)	192	4	
4 0068	Max. defrost time	d07	Min. (Sec.)	1	−199 (※4)	240	30	
4 0069	Min. defrost time	d08	Min. (Sec.)	1	−199 (※4)	240	0	
4 0070	Temp. display delay after defrost, drain (Display Lt)	d09	Min.	1	0	30	7	
4 0071	Hot gas defrost	di 0	0 = Nonuse		1 = Hot gas defrost		0	
4 0072	Temperature deviation of defrost start by evaporating temperature (※5)	di 1	K	0.1	−99.9	99.9	−20.0	
4 0073	Defrost start delay time by evaporating temp	di 2	Min.	1	0	30	1	
4 0074	Deviation of compressor off by evaporating temperature (※6)	di 3	K	1	−99.9	0.0	0.0	
4 0075	Deviation of compressor on by evaporating temperature	di 4	K	0.1	0	100	10.0	

(※1) Defrost termination

Settings	Defrost termination
1	End by defrost time
2	End by temp. of defrost end max. defrost time whichever comes first
3	End by meeting all conditions such as temp. of defrost end and max. defrost time
4	End by temp. of defrost end and max. defrost time whichever comes first (But, in case of ending defrost twice in succession by defrost time, 'Edt' alarm will be occurred.)

(※2) Pump down time

- Defrost starts after pump down refrigerant of cooler plumbing before defrost output

(※3) Drain time

- Water drainage time after defrost (Output if solenoid is off during this time.)

(※4) If setting it to minus ('-'), defrost cycle will be changed in minutes and max. & min. defrost time will be changed in seconds.

(※5) Temperature deviation of defrost start by evaporating temperature

Defrost schedule type [d05]= 2 (Defrost start by evaporating temperature)
Defrost starts if defrost temp. B2) <= set point − temp. deviation of defrost start

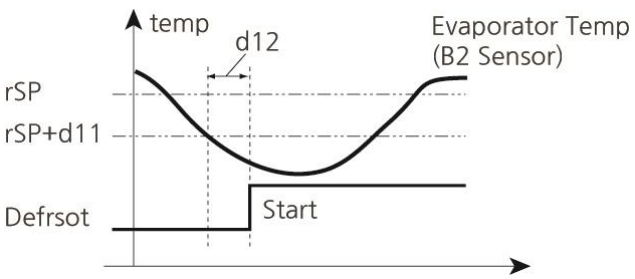

(※6) Deviation of comp. off by evaporating temperature

If setting it to '0' this function is not used. 'Fc' will be displayed once this function is operated.

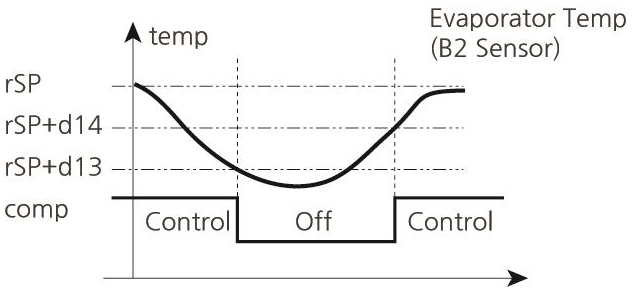

: Time Parameter Setup (S.tm)

Address	Description	Code	Unit	Step	Min.	Max.	Default	Set point by user
4 0076	Present Time – Hour set (Manual)	H00	Hour	1	0	23	Present hour	
4 0077	Present Time – Min. set (Manual)	H01	Minute	1	0	59	Present minute	
4 0078	Start time of nighttime operation	H02	Hour / Min.	0.1	0	23.5	00.0	
4 0079	Stop time of nighttime operation	H03	Hour / Min.	0.1	0	23.5	8.0	
4 0081	1st Defrost Time	h01	Hour / Min	0.1	0	23.5	no(–1)	
4 0082	2nd Defrost Time	h02	Hour / Min	0.1	0	23.5	no(–1)	
4 0083	3th Defrost Time	h03	Hour / Min	0.1	0	23.5	no(–1)	
4 0084	4th Defrost Time	h04	Hour / Min	0.1	0	23.5	no(–1)	
4 0085	5th Defrost Time	h05	Hour / Min	0.1	0	23.5	no(–1)	
4 0086	6th Defrost Time	h06	Hour / Min	0.1	0	23.5	no(–1)	
4 0087	7th Defrost Time	h07	Hour / Min	0.1	0	23.5	no(–1)	
4 0088	8th Defrost Time	h08	Hour / Min	0.1	0	23.5	no(–1)	
4 0089	Start time of reservation operation	hon	Hour / Min	0.1	0	23.5	00.0	
4 0090	Stop time of reservation operation	hof	Hour / Min	0.1	0	23.5	00.0	

※ Display around the clock and input method are as follows.

– Both start time and end time for reservation operation are "00.0, reservation function is not used

– 10 (Ten) digit number = Hour / Number of decimal digit = Minute

e.g) 9.2 = 9:20 a.m. / 14.3 = 14:30 p.m. / 00.0 = midnight / no = No defrost (Input in communication is '-1')

: Fan (Comp) Parameter Setup (6.Fn)

Address	Description	Code	Unit	Step	Min.	Max.	Default	Set point by user
4 0091	Fan operation at cleaning mode	F00	0= Stop		1 = Run		0	
4 0092	Fan operation at cooling stop	F01	0= Stop 1 = Run 2= Stop after fan stop delay time [F02]				1	
4 0093	Fan stop delay time (※1)	F02	Sec.	1	0	600	0	
4 0094	Fan running mode at defrost	F03	0= Stop (Defrost by heat source) 1 = Run (Natural defrost)				0	
4 0095	Fan running mode after defrost	F04	0= Immediately run 1 = Operating after defrost end and fan run delay time[F05] 2= Operating when fan run temp. reaches[F06]after defrost				0	
4 0096	Fan operation delay after defrost	F05	Sec.	1	0	600	0	
4 0097	Fan operation temp after defrost	F06	℃	1	-50.0	158.0	0.0	
4 0098	DOOR alarm delay time	F07	Min.	1	0	240	10	
4 0099	DIG.IN delay alarm	F08	Sec.	1	0	600	60	
4 0100	Min. stop duration time of compressor	C01	Min.	1	0	900	0	
4 0101	Min. run duration time of compressor	C02	Min.	1	0	900	0	
4 0102	Obligatory run duration time of compressor	C03	Min.	1	0	60	3	
4 0103	Obligatory stop duration time of compressor (※2)	C04	Min.	1	0	60	10	
4 0104	Compressor's run delay time after power up	C05	Min.	1	0	60	0	
4 0105	Parameter change by communication	rAC	0= Prohibition of changing		1 = Changeable		1	

(※1) Fan stop delay time

- Stop delay time, fan operation when cooling stops[F01] = 2

(※2) Obligatory run duration time of compressor

- Compressor will run and stop in obligatory run duration time[C04] and obligatory run duration time [C03]of compressor when compulsory cooling or sensor fault

: Status Message

Code	Description	Code	Description
dPd	During standby of pump down before defrost	FC	Compressor off by evaporating temperature
ddr	During delay of drain time after defrost	SoF	Stop status of compulsory compressor output
dFE	Defrost temp. is higher than defrost end temp. when compulsory defrost	FoF	Stop status of compulsory fan output
dF	During defrost operation	CC	When compulsory cooling operation
Lt	Delay of temperature display after defrost	CLn	When operation cleaning mode
Lo	When injection cooling operation		

: Specifications of communication

Item	Description
Transmission line connection	Multiple line
Communications method	RS485 (2-wire, half-duplex)
Baud-rate	BPS default 9600 BPS
Parity, Data, Stop bit	None, 8 Data, 1 Stop
Protocol Type	Modbus RTU MODE
Function Code	Read HOLD REGISTERS (0x03) / Preset Single Register (0x06)
Maximum Read Word	32 Word
Media Type	BELDEN 9841 / 9842, LG LIREV-AMESB
Poll interval	100msec

: Trip / Alarm Message

No.	Description	Code	Conditions for occurrence	Way to clear	Operating at detection
1	System fault	SYS	It will be happened when data of EEPROM are damaged by noise or inductive load.	Use it after initialization of parameters (Settlement for causes of noise is needed)	Immediately stop
2	Hi temp. alarm	EHH	If present temperature is higher than set point [rSP]+ high temperature alarm [A01] and lasting during high temperature alarm delay time [A04] ※ High temperature alarm is detected after high temp. alarm delay time after defrost [A03].	Clear alarm if present temperature is less than set point[rSP] + high temperature alarm A01] – 1.0℃ 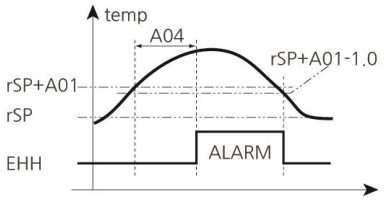	Alarm
3	Low temp. alarm	ELL	If present temperature is higher than set point [rSP] + low temperature alarm [A02] and lasting during low temperature alarm delay time [A05]	Clear alarm if present temperature is less than set point [rSP]+low temperature alarm [A02] +1.0℃ 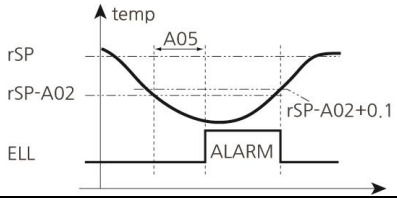	Alarm
4	B1 temp. sensor fault	Eb1	If B1 sensor is disconnected or short circuited	When B1 sensor is normal	Alarm
5	B2 temp. sensor fault	Eb2	If B2 sensor is disconnected or short circuited	When B2 sensor is normal	Alarm
6	B3 temp. sensor fault	Eb3	If B3 sensor is disconnected or short circuited	When B3 sensor is normal	Alarm
7	Defrost end alarm	Edt	In case of ending defrost twice in succession by defrost time		Alarm
8	Probe fault Emergency cooling operation	REC	Repeat the operation (run/stop) which was saved at normal condition when all probes are faulty	When B1 sensor is normal (Manual reset)	Alarm
9	Malfunction of RTC	ECL	RTC is stopped (Only for model which is equipped with RTC function)	Please request service. RTC function will not be operated	Alarm
10	Interlock alarm	ALt	DIG.IN is opened	DIG.IN is closed	Immediately stop
11	Fan fault alarm	AFn	DIG.IN is opened	DIG.IN is closed	Immediately stop
12	DIG IN. delay alarm	AAL	DIG.IN is opened and lasting during DIG IN. delay time (F08)	DIG.IN is closed	Immediately stop
13	DIG IN. delay alarm	EAL	DIG.IN is closed	Clear alarm when digital input is closed	Alarm
14	Door open alarm	Edo	DIG. IN is opened and lasting during door alarm delay time	DIG.IN is closed	Alarm
15	Stop status	StP	DIG.IN is opened	Clear alarm when digital input is closed	Immediately stop
16	Door open alarm	Edo	DIG.IN is stopped and lasting door alarm delay time ※ Comp. & Fan are stopped at alarm	DIG.IN is closed	Alarm
17	Door open alarm	Edo	DIG.IN is opened and lasting during door alarm delay time ※ Fan is stopped at alarm	DIG.IN is closed	Alarm

※ In case of occurring error, error message will be flickering in every 0.5 seconds as above

※ Hi and low temperature alarm will not be detected during temp. alarm delay time [A06]after power up.